Engineering Specification

LEAD FREE*

Series LFM115-3

Pressure Reducing Control Valve with Hydraulic Check Feature

Full Port Ductile Iron Single Chamber Valve

Features

- Throttles to reduce high upstream pressure to constant lower downstream pressure
- Hydraulic Check Feature prevents flow reversal
- Reducing setpoint is adjustable

Standard Components

1 – Main Valve (M100 — Single Chamber)
2 – Pressure Reducing Control
3 – Check Valve
4 – Fixed Orifice
X – Isolation Cocks

Options and Accessories

- O FC Flo-Clean Strainer (Standard 1¼" – 4")
- O Y Y-Strainer (Replaces Flo-Clean)
- O ACS Adjustable Closing Speed (Replaces Fixed Orifice)
- O AOS Adjustable Opening Speed (Standard 1¼" – 4")
- O P Position Indicator
- O L Limit Switch

Operation

The Combination Pressure Reducing and Check Automatic Control Valve (ACV) is designed to automatically reduce a fluctuating higher upstream pressure to a constant lower downstream pressure, and close drip-tight when downstream pressure becomes greater than upstream pressure.

It is controlled by a normally open, pressure reducing pilot designed to: 1) Open (allowing fluid out of the main valve cover chamber) when downstream pressure is below the adjustable setpoint, and 2) Close (allowing fluid to fill the main valve cover chamber) when downstream pressure is above the adjustable setpoint. A decrease in downstream pressure causes the valve to modulate toward an open position, raising downstream pressure. An increase in downstream pressure causes the valve to modulate toward a closed position, lowering downstream pressure.

If downstream pressure becomes greater than upstream pressure, downstream pressure is admitted to the main valve cover chamber, closing the valve and preventing reversal of flow. Normal pressure reducing operation resumes when upstream pressure exceeds downstream pressure.

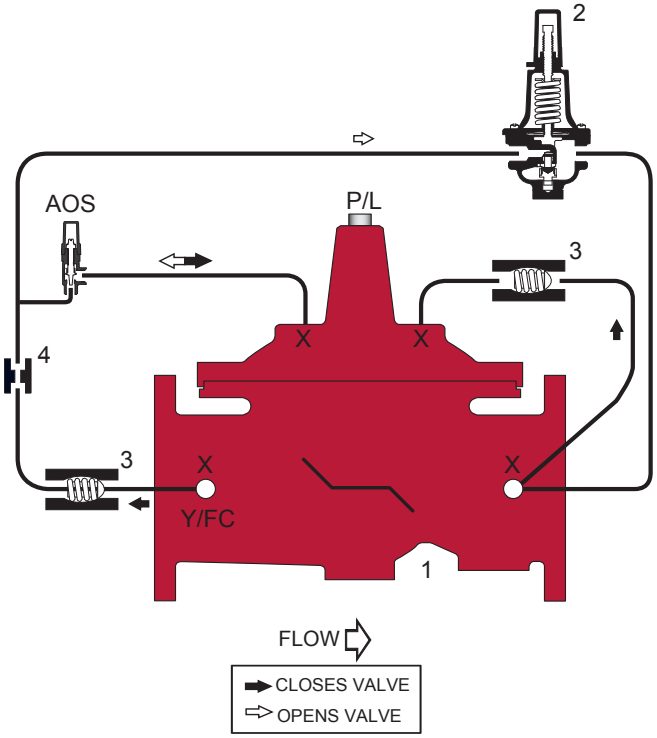

***The wetted surface of this product contacted by consumable water contains less than 0.25% of lead by weight.**

NOTICE

The information contained herein is not intended to replace the full product installation and safety information available or the experience of a trained product installer. You are required to thoroughly read all installation instructions and product safety information before beginning the installation of this product.

Watts product specifications in U.S. customary units and metric are approximate and are provided for reference only. For precise measurements, please contact Watts Technical Service. Watts reserves the right to change or modify product design, construction, specifications, or materials without prior notice and without incurring any obligation to make such changes and modifications on Watts products previously or subsequently sold.

2020

M Series Basic Valves

Pressure Reducing Control Valve with Hydraulic Check Feature

Full Port Ductile Iron Single Chamber Basic Valve

This Watts Automatic Control Valve (ACV) is a full port, single chamber basic valve that incorporates a one-piece disc and diaphragm assembly. This assembly is the only moving part within the valve allowing it to open, close, or modulate as commanded by the pilot control system.

Watts ACV Main Valves are Lead Free. The Watts ACV piloting system contains Lead Free* components, ensuring all of our configurations are Lead Free compliant.

Globe Pattern Single Chamber Basic Valve (M100)

Angle Pattern Single Chamber Basic Valve (M1100)

Standard Materials

Body and Cover:	Ductile Iron ASTM A536
Coating:	NSF Listed Fusion Bonded Epoxy Lined and Coated
Trim:	316 Stainless Steel
Elastomers:	Buna-N (standard) EPDM (optional) Viton® (optional)
Nut, Spring and Stem:	Stainless Steel
Anti-Scale (Optional):	Xylan Coated Stem and Seat

NSF Certified to NSF/ANSI 61-G

Viton® is a registered trademark of DuPont Dow Elastomers.

Operating Pressure

Threaded = 400psi (27.6 bar)
150# Flanged = 250psi (17.2 bar)
300# Flanged = 400psi (27.6 bar)
Grooved End = 400psi (27.6 bar)

Operating Temperature

Buna-N: 160°F (71°C) Maximum
EPDM: 300°F (140°C) Maximum
Viton®: 250°F (121°C) Maximum
Epoxy Coating**: 225°F (107°C) Maximum

*** Valves can be provided without internal epoxy coating consult factory*

Basic Valve Body Options

Globe Flanged

Angle Flanged

Globe Grooved End

Angle Grooved End

Globe Threaded

Angle Threaded

© 2020 Watts

ACV Schematic - Series LFM115-3

Flow Data

	Valve Size - Inches	1¼	1½	2	2½	3	4	6	8	10	12	14	16
Suggested	Maximum Continuous Flow Rate Gpm (Water)	95	130	210	300	485	800	1850	3100	5000	7000	8500	11100
	Maximum Intermittent Flow Rate Gpm (Water)	119	161	265	390	590	1000	2300	4000	6250	8900	10800	14100
	Minimum Flow Rate Gpm (Water)	3	5	6	9	15	16	17	25	55	70	190	400
Cv	C_v Factor GPM (Globe)	26	26	48	75	112	188	387	764	1215	1734	2234	3131
	C_v Factor GPM (Angle)	26	27	57	91	125	207	571	889	1530	1945		

- Maximum continuous flow based on velocity of 20 ft. per second.
- Maximum intermittent flow based on velocity of 25 ft. per second.
- Minimum flow rates based on a 20-40 psi pressure drop.
- The C_v Factor of a value is the flow rate in US GPM at 60°F that will cause a 1psi drop in pressure.
- C_v factor can be used in the following equations to determine Flow (Q) and Pressure Drop (ΔP):

  Q (Flow) = $C_v\sqrt{\Delta P}$ **ΔP (Pressure Drop) = $(Q/C_v)^2$**

- The C_v factors stated are based upon a fully open valve.
- Many factors should be considered in sizing control valves including inlet pressure, outlet pressure and flow rates.
- For sizing questions including cavitation analysis consult Watts with system details.

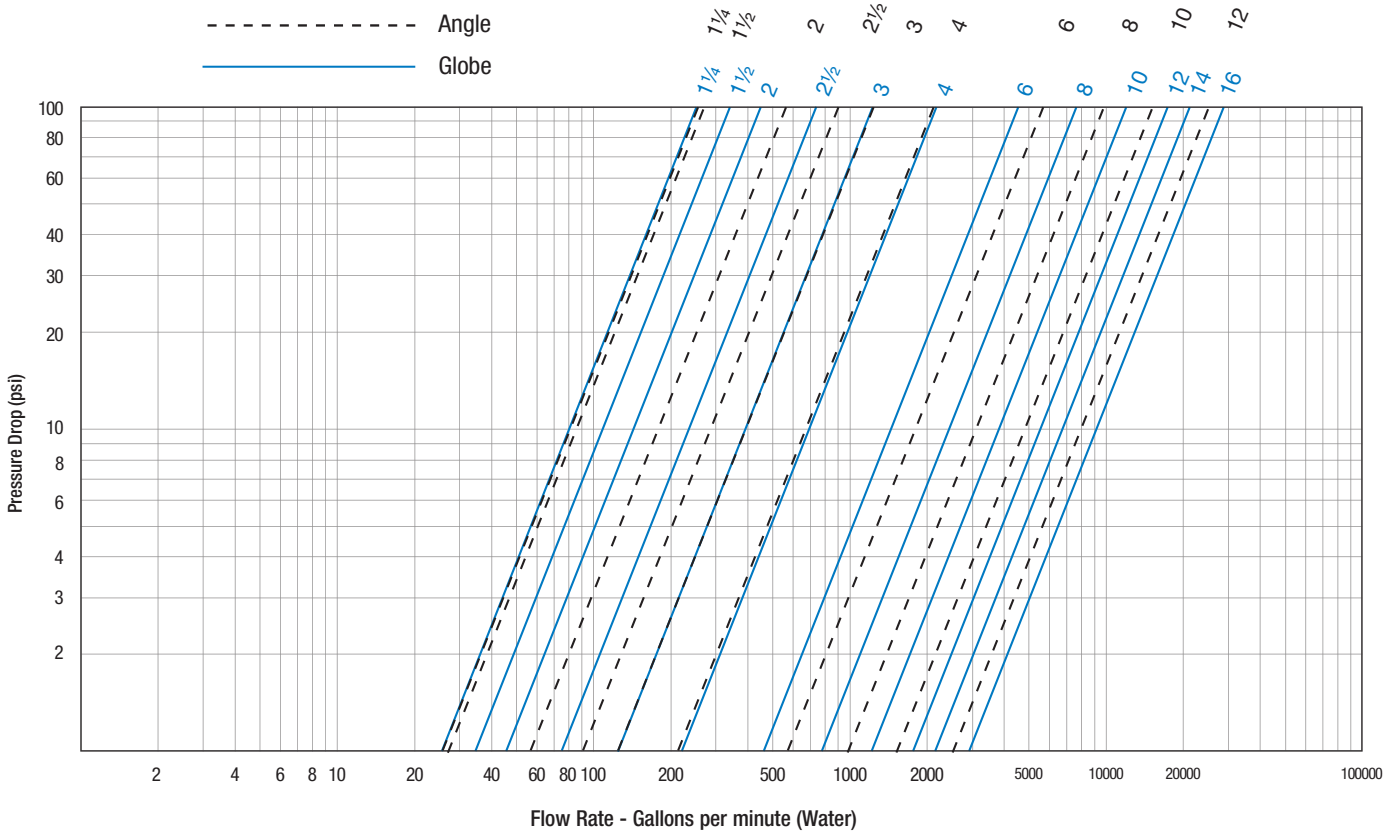

Valve Cover Chamber Capacity

Valve Size - Inches	1¼	1½	2	2½	3	4	6	8	10	12	14	16
fl.oz.	4	4	4	10	16	22	70					
U.S. Gal								1¼	2½	4	6½	9½

Valve Travel

Valve Size - Inches	1¼	1½	2	2½	3	4	6	8	10	12	14	16
Travel - Inches	⅜	⅜	½	⅝	¾	1	1½	2	2½	3	3½	4

© 2020 Watts

ACV Schematic - Series LFM115-3

M100 Basic Valve

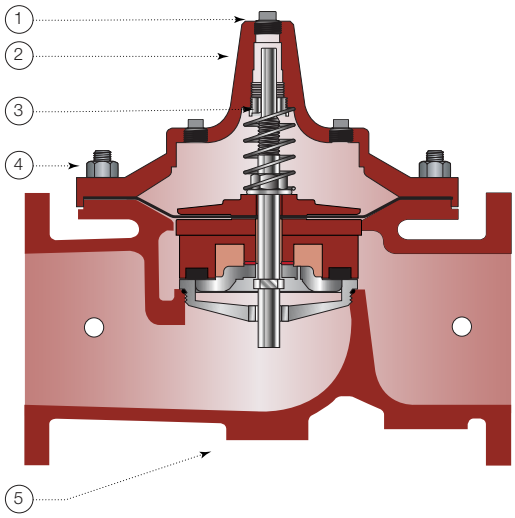

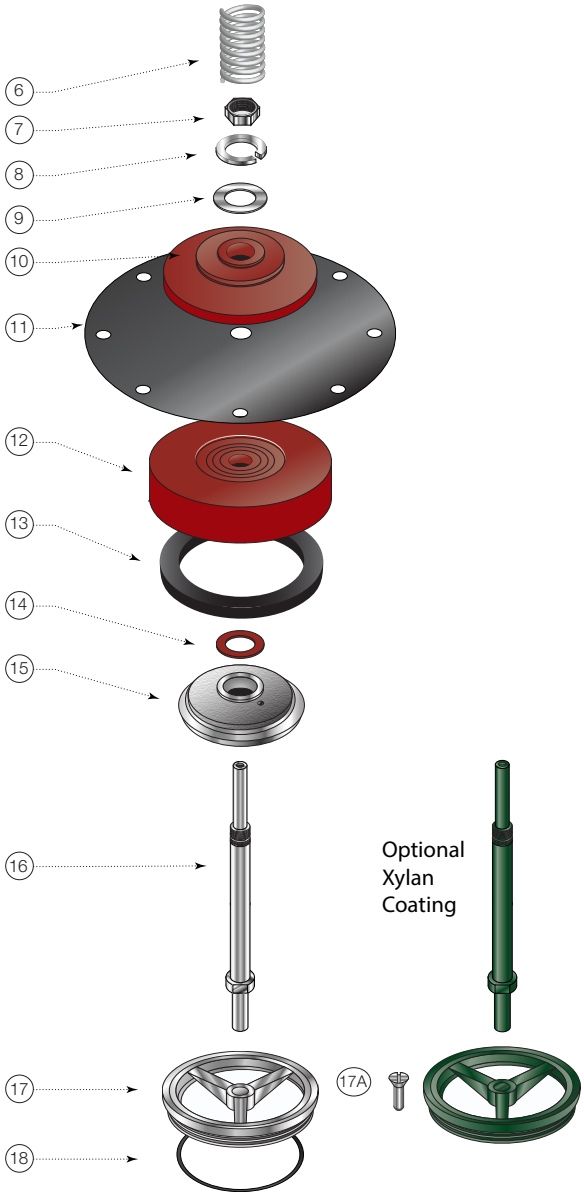

Item	Description	Material
1	Pipe Plug	Lead Free Brass
2	Cover	ASTM A536 65-45-12 Epoxy Coated Ductile Iron
3	Cover Bearing	ASTM A276 304 Stainless Steel
4	Stud with Cover Nut and Washer	ASTM A570 Gr.33 Zinc Plated Steel
5	Body	ASTM A536 65-45-12 Epoxy Coated Ductile Iron
6	Spring	ASTM A276 302 Stainless Steel
7	Stem Nut	ASTM A276 304 Stainless Steel
8	Lock Washer	ASTM A276 304 Stainless Steel
9	Stem Washer	ASTM A276 304 Stainless Steel
10	Diaphragm Washer	ASTM A536 65-45-12 Epoxy Coated Ductile Iron
11	Diaphragm*	Buna-N (Nitrile)
12	Disc Retainer	ASTM A536 65-45-12 Epoxy Coated Ductile Iron
13	Seat Disc*	Buna-N (Nitrile)
14	Spacer Washer* x5	NY300 Fiber*
15	Disc Guide	ASTM A743 CF8M (316) Stainless Steel
16	Shaft	ASTM A276 304 Stainless Steel
17	Seat Ring**	ASTM A743 CF8M (316) Stainless Steel
17A	Seat Screw** (8" and Larger)	ASTM A276 304 Stainless Steel
18	Seat Gasket*	Buna-N (Nitrile)

** Contained in Main Valve Repair Kit*
***Note: 6 inch and Smaller Valves, Seat Ring is threaded*

NOTICE

Installation: If unit is installed in any orientation other than horizontal (cover up) OR extreme space constraints exist, consult customer service prior to or at the time of order.

© 2020 Watts

ACV Schematic - Series LFM115-3

Dimensions

Flanged and Threaded

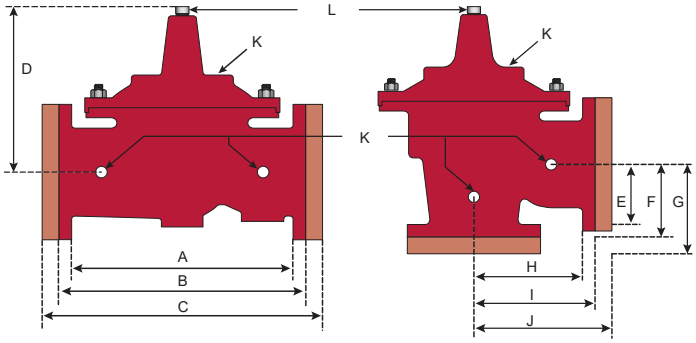

Grooved End

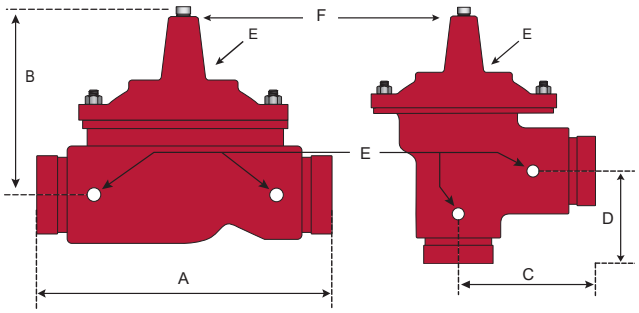

Flanged and Threaded Dimensions

Valve Size	Globe Thread		Globe 150#		Globe 300#		Cover To Center		Angle Thread		Angle 150#		Angle 300#		Angle Thread		Angle 150#		Angle 300#		Port Size NPT	Port Size NPT	Shipping Weights*	
	A		B		C		D		E		F		G		H		I		J		K	L		
in.	*in.*	*mm*	*in.*	*mm*	*in.*	*mm*	*in.*	*mm*	*in.*	*mm*	*in.*	*mm*	*in.*	*mm*	*in.*	*mm*	*in.*	*mm*	*in.*	*mm*	*in.*	*in.*	*lbs.*	*kgs.*
1¼	7¼	184					5½	140													⅜	¼	20	9
1½	7¼	184	8½	216			5½	140	3¼	83					1⅞	48					⅜	¼	25	11
2	9⅜	238	9⅜	238	10	254	6¾	171	4¾	120	4¾	121	5	127	3¼	83	3¼	83	3½	89	⅜	½	40	18
2½	11	279	11	279	11⅝	295	7½	191	5½	140	5½	140	5⅞	149	4	102	4	102	4 5/16	110	½	½	65	29
3	12½	318	12	305	13¼	337	8¼	210	6¼	159	6	152	6⅜	162	4½	114	4	102	4⅜	111	½	½	95	43
4			15	381	15⅝	397	10⅝	270			7½	191	7⅞	200			5	127	5 5/16	135	¾	¾	190	86
6			20	508	21	533	13	330			10	254	10½	267			6	152	6½	165	¾	¾	320	145
8			25⅜	645	26⅜	670	16	406			12¾	324	13¼	337			8	203	8½	216	1	1	650	295
10			29¾	756	31⅛	791	17	430			14⅞	378	15 9/16	395			8⅝	219	9 5/16	237	1	1	940	426
12			34	864	35½	902	20⅞	530			17	432	17¾	451			13¾	349	14½	368	1	1¼	1500	680
14			39	991	40½	1029	24¼	616													1	1½	1675	760
16			41⅜	1051	43½	1105	25¼	640													1	2	3100	1406

Grooved End Dimensions

Valve Size	Globe Grooved		Cover To Center		Angle Grooved		Angle Grooved		Port Size (npt)	Port Size (npt)	Shipping Weights*	
	A		B		C		D		E	F		
in.	*in.*	*mm*	*in.*	*mm*	*in.*	*mm*	*in.*	*mm*	*in.*	*in.*	*lbs.*	*kgs.*
1¼	8½	216	5½	140	4¼	108	3¼	83	⅜	¼	25	11
1½	8½	216	5½	140	4¼	108	3¼	83	⅜	¼	25	11
2	9	229	6½	165	4¾	121	3¼	83	⅜	½	40	18
2½	11	279	7½	191	5½	140	4	102	½	½	65	29
3	12½	318	8¼	210	6	152	4¼	108	½	½	95	43
4	15	381	10⅝	270	7½	191	5	127	¾	¾	190	86
6	20	508	13⅜	340					¾	¾	320	145
8	25⅜	645	16	406					1	1	650	295

© 2020 Watts

LEAD FREE*

Model LFCP15

Pressure Reducing Pilot

Size: ⅜" NPT

The Model LFCP-15 is a direct acting, diaphragm actuated Pilot that automatically reduces a higher upstream (inlet) pressure to a constant downstream (outlet) pressure. It is normally held open by the force of the adjustable spring setting above the diaphragm.

The Pilot modulates towards a closed position when outlet pressure exceeds the spring setpoint, lowering the delivery pressure. It modulates towards an open position when the outlet pressure falls below the spring setpoint, increasing the delivery pressure.

When a Model LFCP-15 is installed in the piping circuit of an Automatic Control Valve, its throttling action causes the Main Valve to throttle open or closed accordingly. Turning the adjustment screw clockwise raises the control setpoint, increasing main valve outlet pressure. Turning the adjustment screw counterclockwise lowers the control setpoint, decreasing Main Valve outlet pressure.

The Model LFCP-15 is equipped with one ⅜" NPT inlet and two outlet ports for ease of installation. The unused outlet port may be plugged or used as a pressure gauge connection.

Model LFCP15

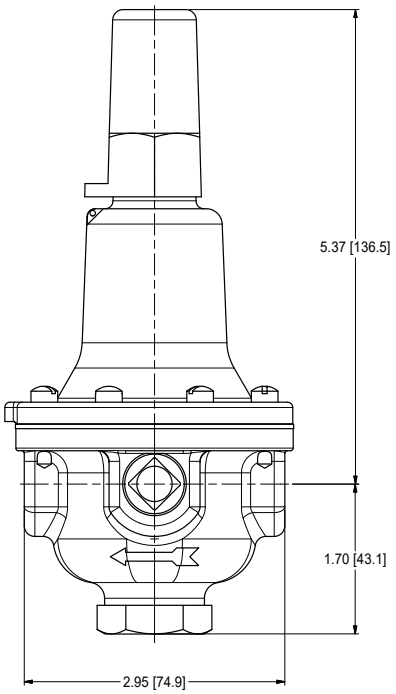

Specifications

Body Material:	Lead Free Copper Silicon Alloy CF8M (316) Stainless Steel (optional)
Seat:	316 Stainless Steel
Elastomers:	Buna-N (standard) Viton® (optional) EPDM (optional)
Inlet Pressure Rating:	400psi (27.6 bar) maximum
Adjustment Range:	30-300psi (2.1 - 20.7 bar) (standard) 2-30psi (0.15-2 bar) (optional)

Viton® is a registered trademark of DuPont Dow Elastomers.

***The wetted surface of this product contacted by consumable water contains less than 0.25% of lead by weight.**

© 2020 Watts

Model LFCP15

Pressure Reducing Pilot

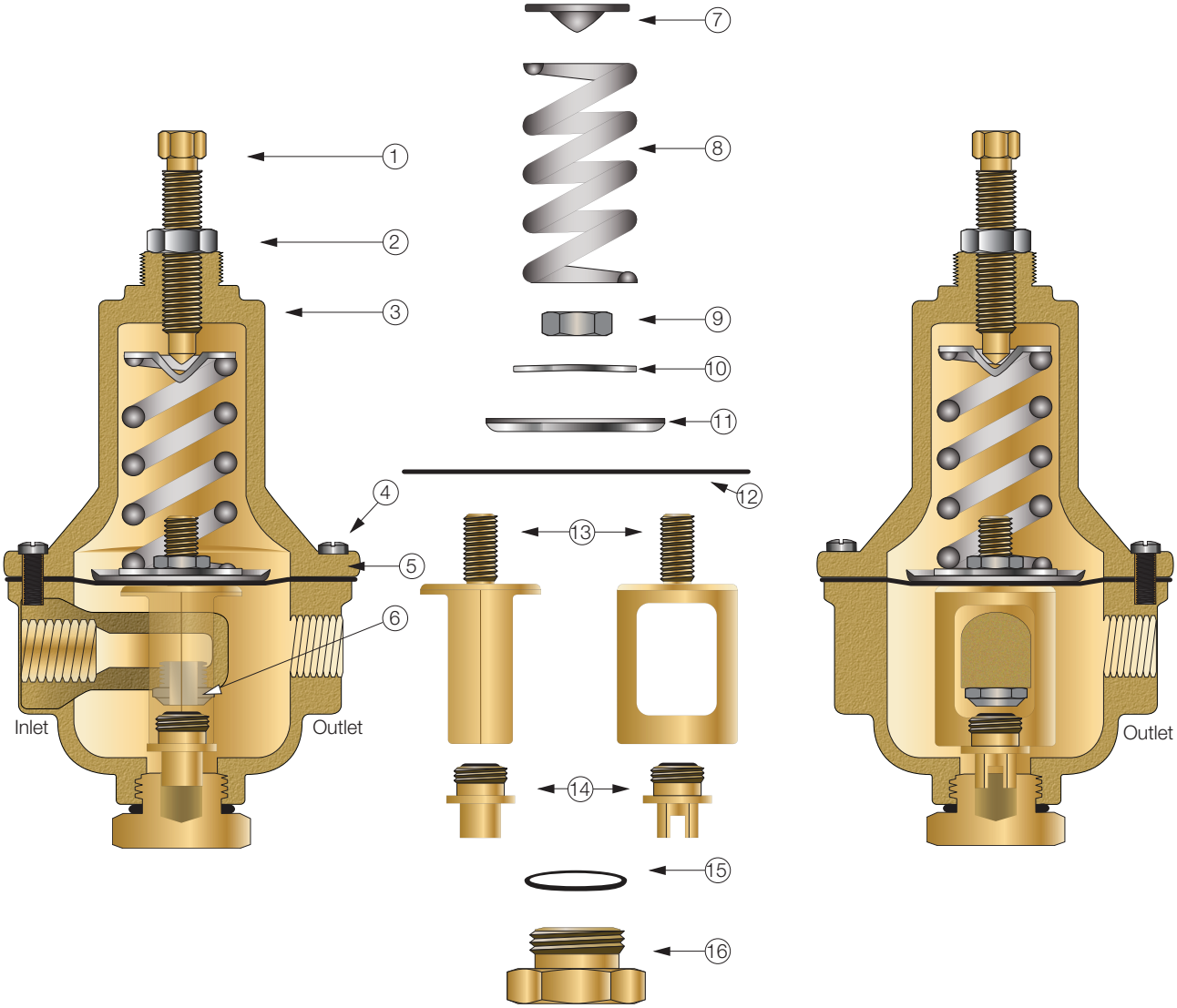

Item	Description
1	Adjusting Screw
2	Nut
3	Spring Housing
4	Cap Screw
5	Body
6	Seat
7	Spring Guide
8	Spring
9	Nut
10	Belleville Washer
11	Diaphragm Washer
12	Diaphragm*
13	Yoke
14	Disc and Retainer Assembly*
15	O-Ring*
16	Bottom Cap

**Included in Repair Kit*

© 2020 Watts

LEAD FREE*

Model CK

Check Valve

Size: ¼" – 1" NPT

Model CK Check Valves are pilot line check valves. In typical applications these low cracking pressure in-line checks provide a hydraulic check feature to a pilot system. When the main valve outlet pressure exceeds inlet pressure, fluid is directed from the outlet to the main valve cover. This causes the main valve to close until inlet pressure is again greater than outlet.

Model LFCK

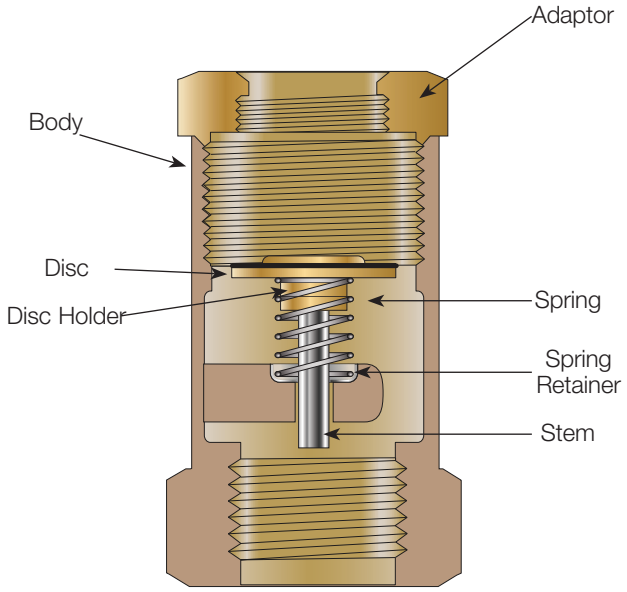

Specifications

Standard Material:	Brass Housing and Body Stainless Steel Indicating Rod
Optional Material:	Stainless Steel Housing and Body Disc Viton® (¼" – ½") PTFF (1")
Pressure Rating:	400psi (27.6 bar)

Viton® is a registered trademark of DuPont Dow Elastomers.

***The wetted surface of this product contacted by consumable water contains less than 0.25% of lead by weight.**

© 2020 Watts

LEAD FREE*

Model BV

Ball Valve

Size: ¼" – 1" NPT

Model BV Ball Valves are used in pilot lines to provide a positive shutoff in any override or maintenance situation for simple trouble shooting. This 2-piece, full port valve features: bottom loaded stems, PTFE seats and packing.

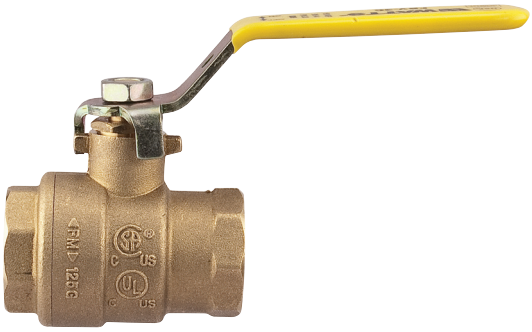

Lead Free Ball Valve

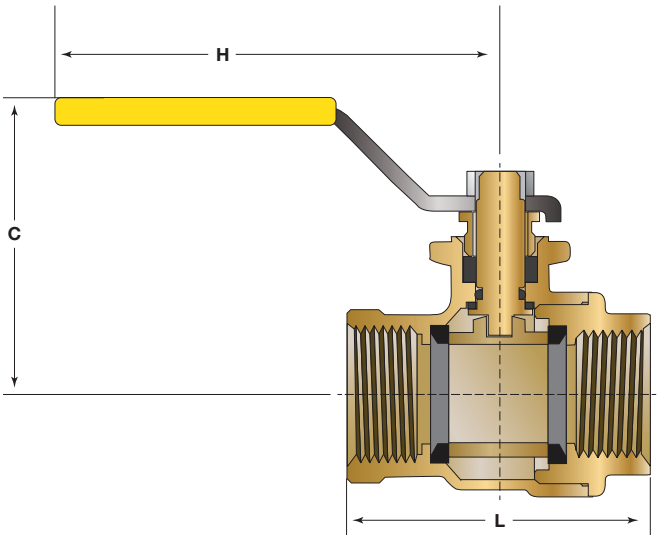

Size	Dimensions						Weight	
	C		H		L			
in.	*in.*	*mm*	*in.*	*mm*	*in.*	*mm*	*lbs.*	*kg.*
¼	1 13/16	46	3 7/16	87	1¾	45	0.4	0.2
⅜	1 13/16	46	3 7/16	87	1¾	45	0.4	0.2
½	1 13/16	46	3 7/16	87	1 15/16	50	0.4	0.2
¾	2¼	57	4	101	2 5/16	59	0.8	0.3

Specifications

Standard Material: Copper Silicon Alloy Body and Adaptor Chrome Plated Ball

Optional Material: Stainless Steel Housing, Body and Adaptor Stainless Steel Ball

Pressure Rating: 600psi (41 bar) Non Shock

Temp Rating: -40°F - 400°F

***The wetted surface of this product contacted by consumable water contains less than 0.25% of lead by weight.**

© 2020 Watts

LEAD FREE*

Model LF60

Flo-Clean Strainer

Size: ¼" – ¾" NPT

Model LF60 Flo-Clean Strainers are used to filter the fluid passing through the pilot circuit, and provide protection to pilot circuit speed controls and pilots. It is installed in the inlet body port of the Main Valve, exposing the strainer element to main line flow. The currents and flow across the screen create a self-scouring effect, cleaning the filter element.

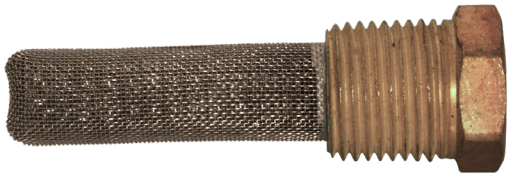

Model LF60

Valve inlet with Filter installed

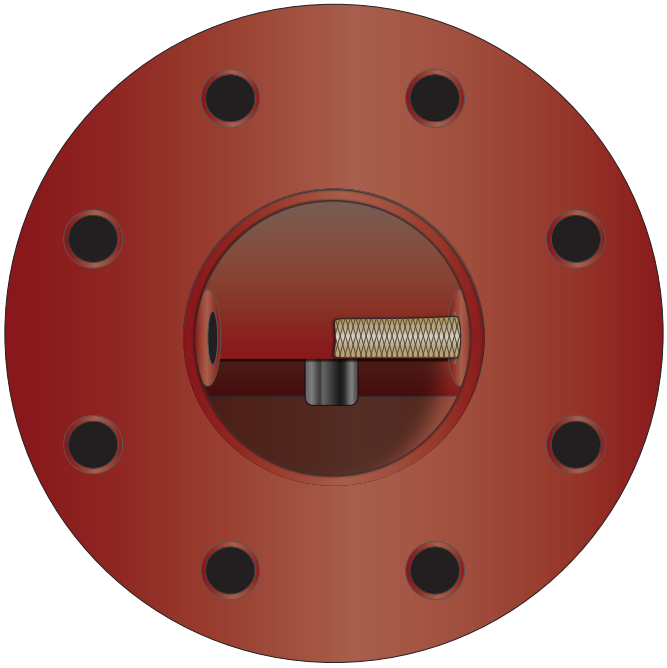

Specifications

Body Material: Lead Free Brass (standard)
Stainless Steel (optional)

Pressure Rating: 400psi (27.6 bar)

Filter Element: Monel

Screen Mesh: 40 Mesh (standard)

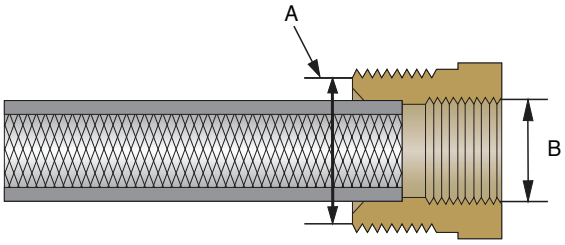

A	B
Male Pipe Thread in.	*Female Pipe Thread* in.
¼	⅛
⅜	¼
½	⅜

***The wetted surface of this product contacted by consumable water contains less than 0.25% of lead by weight.**

© 2020 Watts

LEAD FREE*

Model LF60-1

Y-Pattern Strainer

Size: ¼" – ¾" NPT

Model LF60-1 Y-Pattern Strainers are used to filter the fluid passing through the pilot circuit, and provide protection to pilot circuit speed controls and pilots. The filter element can be accessed for cleaning by removing the clean-out cap, or may be cleaned by installing an optional "blow-down" ball valve.

Model LF60-1

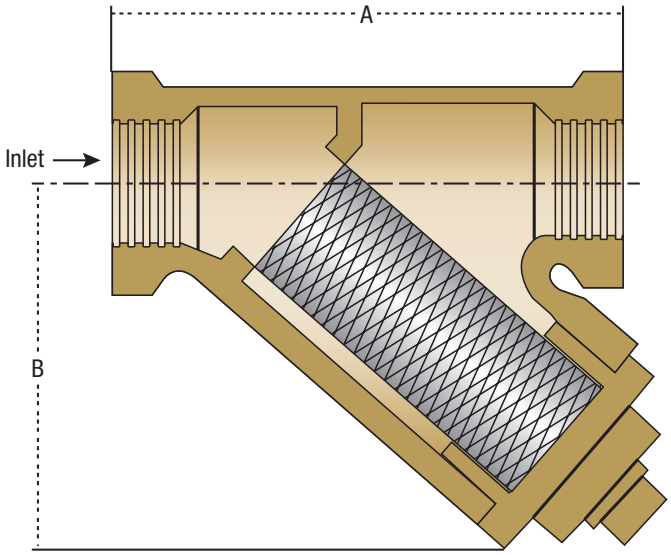

Specifications

Body Material:	Lead Free Copper Silicon Alloy CF8M (316) Stainless Steel (optional)
Retainer Cap:	Lead Free Copper Silicon Alloy
Cap Gasket:	EPDM
Pressure Rating:	400psi (27.6 bar)
Filter Element:	304 Stainless Steel
Mesh Options:	60 Mesh (standard) 100 Mesh (optional)

***The wetted surface of this product contacted by consumable water contains less than 0.25% of lead by weight.**

Dimensions

SIZE	DIMENSIONS				WEIGHT	
	A		B			
in.	in	mm	in	mm	lbs.	kgs.
¼	2 11/16	68	1 11/16	43	1.7	0.77
⅜	2 11/16	68	1 11/16	43	1.7	0.77
½	3	76	2	51	1.7	0.77
¾	3 5/16	84	2 5/16	59	1.7	0.77

© 2020 Watts

LEAD FREE*

Model LFFC

Flow Control

Size: ½" NPT

A Flow Control is an adjustable device used for tuning valve performance. It can be installed to either control the opening or closing the speed of the automatic control main valve. When the flow is in the direction of the needle the flow control is an adjustable restriction. In the free flow direction the seat moves out of the flow path to all unrestricted flow.

Model LFFC

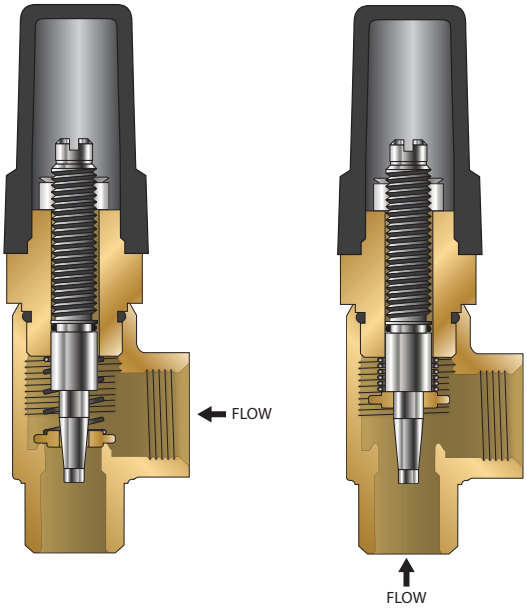

Specifications

Size:	½" NPT
Body Material:	Lead Free Brass Stainless Steel (optional)
Seat:	Lead Free Brass
Needle:	Stainless Steel (304)
Elastomers:	Buna-N (standard)

***The wetted surface of this product contacted by consumable water contains less than 0.25% of lead by weight.**

© 2020 Watts

LEAD FREE*

Model 50

Position Indicator

When specified as an option on a Control Valve, the Model 50 Position Indicator is installed in the topmost cover port of the Main Valve and allows for visual indication of valve position. The Model 50 is also very useful during valve start-up and troubleshooting procedures.

A stainless steel indicating rod threads into the tapped portion of the Main Valve stem and moves inside of a cylindrical Pyrex sight tube. The indicating rod travels up and down, following Main Valve stem movement. The housing protects the sight tube and indicating rod, and allows visibility on two sides. The screw driver operated test cock installed on the top of the Model 50 housing provides a controlled method of removal of air from the cover chamber during start-up or troubleshooting of the Main Valve.

Model LF50

Dimensions

Valve Size (in)	Dimension (in)
1¼ - 1½	7⅜
2	4⅞
2½	4⅞
3	4⅞
4	5
6	5
8	5⅞
10	5⅞
12	7¼
14	7¼
16	7¼
18*	7¼
20*	7¼
24*	7¼

*Reduced Port

Specifications

Standard Material: Stainless Steel Housing and Body
Stainless Steel Indicating Rod
Lead Free Test Cock
Pyrex Sight Tube

Optional Material: Stainless Steel Test Cock

Pressure Rating: 400psi (27.6 bar)

***The wetted surface of this product contacted by consumable water contains less than 0.25% of lead by weight.**

© 2020 Watts

Model 50
Position Indicator

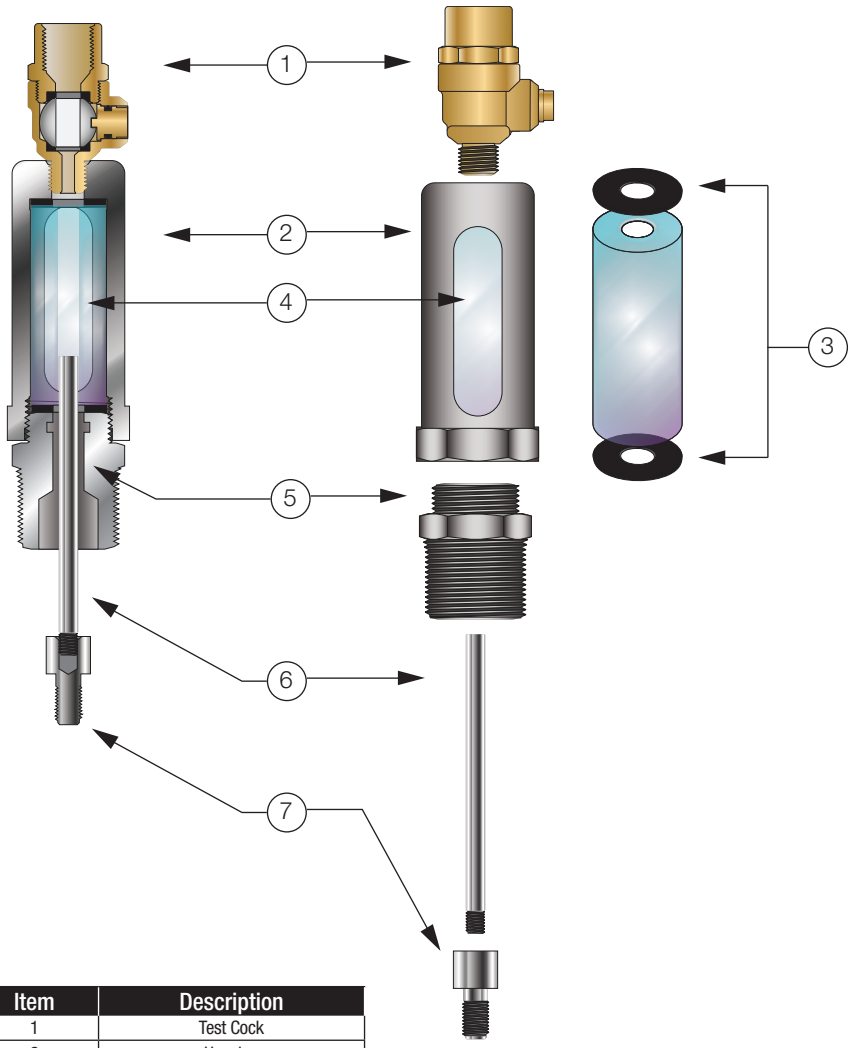

Item	Description
1	Test Cock
2	Housing
3	Gasket
4	Pyrex Sight Tube
5	Body
6	Indicating Rod
7	Stem Adaptor (8" or Larger)

© 2020 Watts

LEAD FREE*

Model 51

Single Limit Switch

The Model 51 Single Limit Switch provides visual indication of valve position, as well as remote electrical indication of "valve open" or "valve closed". The single pole double throw Micro-Switch can be connected to open or close an electrical circuit when the valve opens or closes.

The adjustable collar is normally set to contact the trip arm when the main valve is closed. The collar can be positioned on the stem by loosening the set-screw to actuate the switch at the desired point of valve travel.

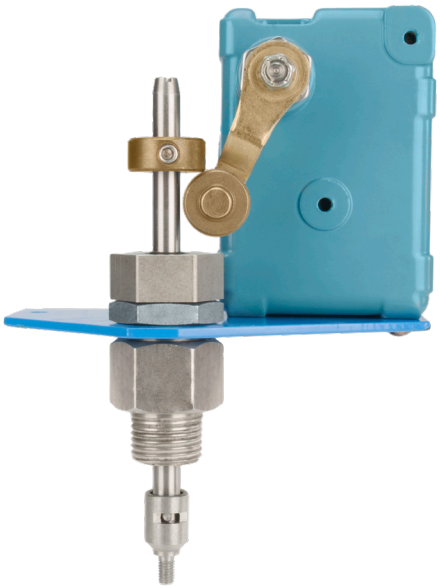

Model LF51

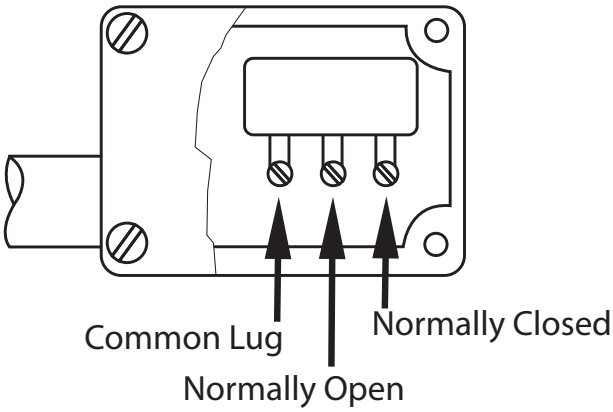

Single Pole Double Throw Switch

Specifications

Body Material:	Stainless Steel
Elastomers:	Buna-N (standard) EPDM (optional) Viton® (optional)
Enclosure:	NEMA 1, 3, 4 and 13 General Purpose (standard) NEMA 1,7 and 9 Explosion Proof (optional)
Electrical:	Form C SPDT Switch 15 amp. 125, 250 or 480 VAC ½ amp. 125 VDC ¼ amp. 250 VDC ½" Conduit Connection

Viton® is a registered trademark of DuPont Dow Elastomers.

***The wetted surface of this product contacted by consumable water contains less than 0.25% of lead by weight.**

© 2020 Watts

Model 51

Single Limit Switch

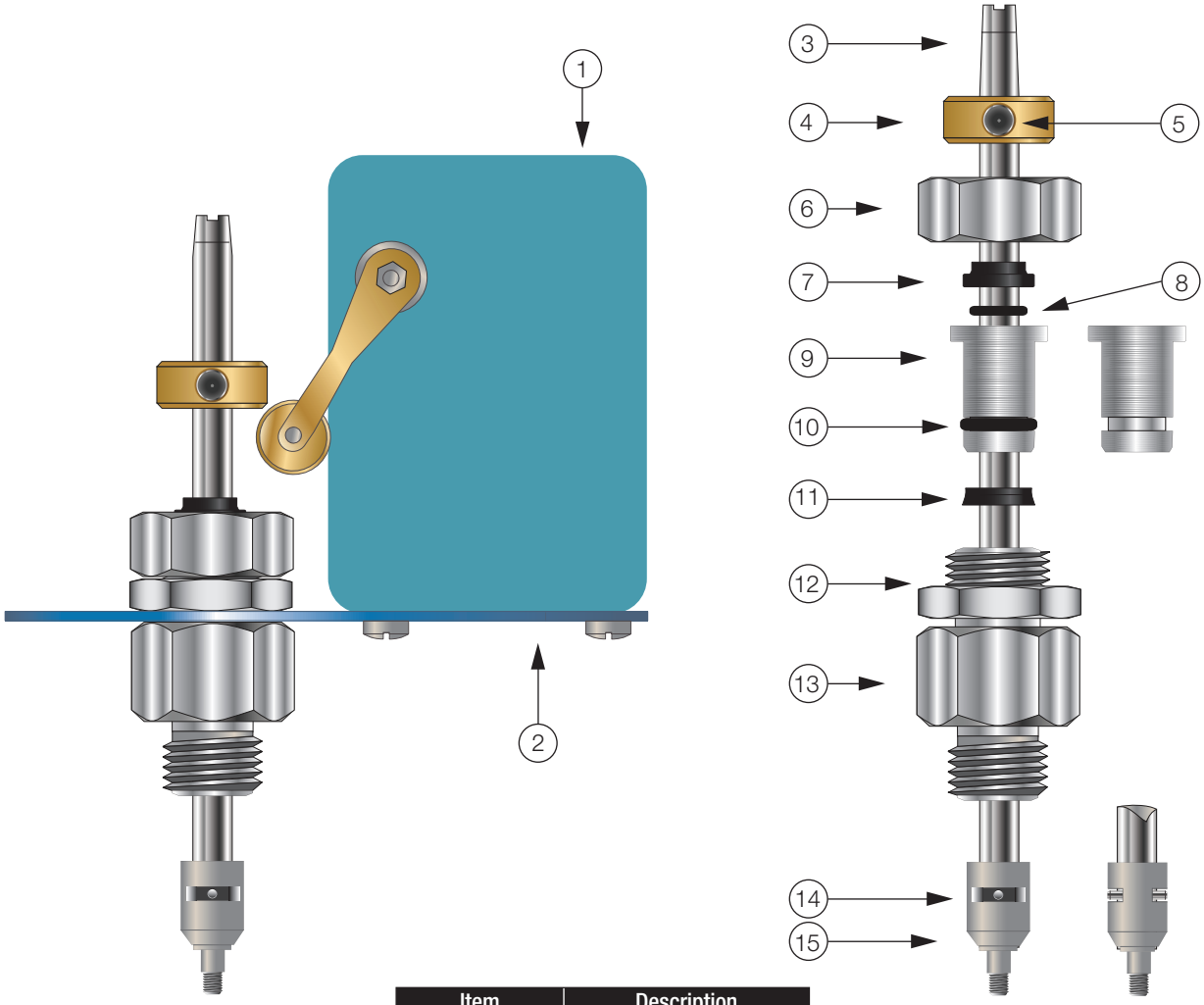

Item	Description
1	Limit Switch
2	Bracket
3	Stem
4	Trip collar
5	Set Screw
6	Cap
7	Wiper Ring*
8	O-Ring*
9	Guide
10	O-Ring*
11	Polypak*
12	Locknut
13	Body
14	Pin
15	Coupling

**Included in Repair Kit*

USA: T: (978) 689-6066 • F: (978) 975-8350 • Watts.com
Canada: T: (888) 208-8927 • F: (905) 332-7068 • Watts.ca
Latin America: T: (52) 55-4122-0138 • Watts.com

© 2020 Watts